Mark	Date	Revised Description	Correcter
-	-	-	-

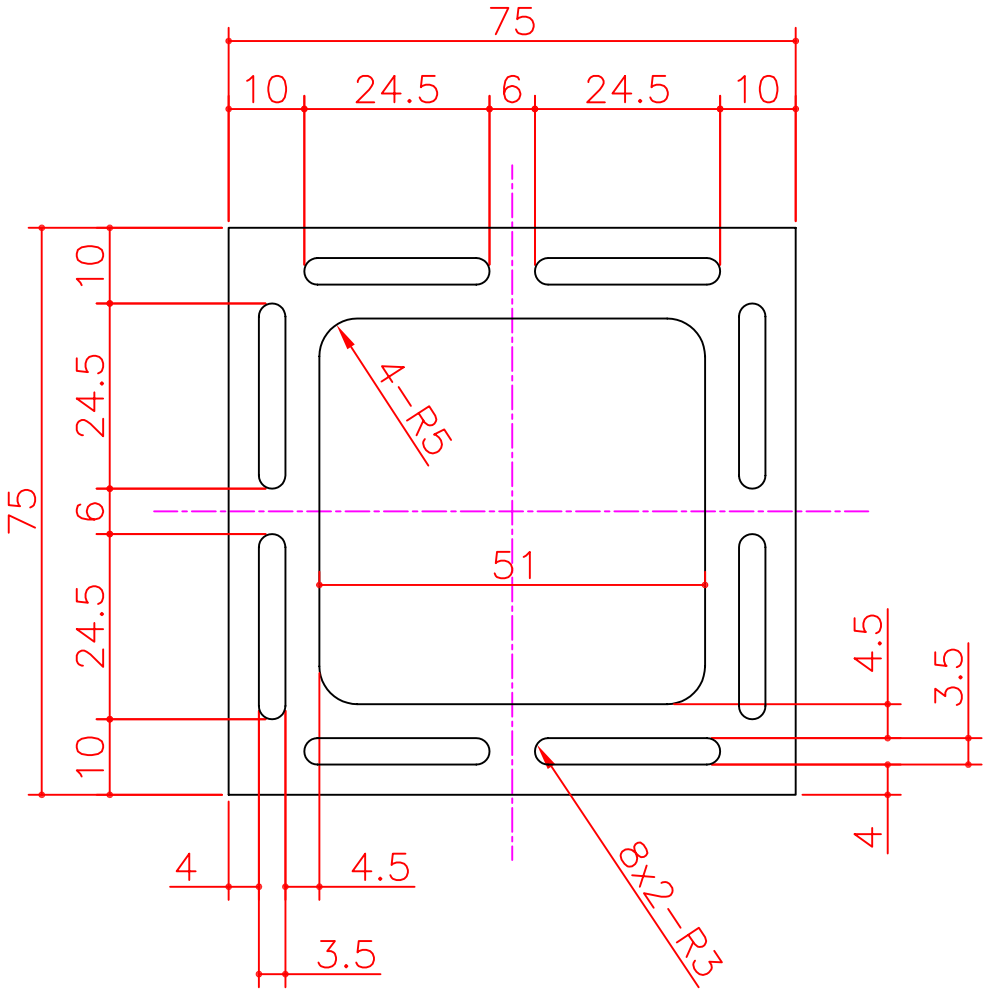

	Size(mm)	Weight(kg/m)
Profile	W75xH75	2.74

GéoBois
Géobois s.a.r.l.
7 rue de Phalsbourg
67000 Strasbourg
tel: 03 88 51 25 45
fax: 03 88 51 40 85

Title	Profile Drawing
	W75XH75
Customer	

Scale	Date	Dwg No.
1:1	2002.08.05	GE-003